YASKAWA

YRC1000micro OPTIONS
CC-Link COMMUNICATIONS FUNCTION
INSTRUCTIONS

FOR SST-CCS-PCIE MADE BY Molex, Inc.

Upon receipt of the product and prior to initial operation, read these instructions thoroughly, and retain for future reference.

MOTOMAN INSTRUCTIONS

MOTOMAN-□□□ INSTRUCTIONS
YRC1000micro INSTRUCTIONS
YRC1000micro OPERATOR'S MANUAL
YRC1000micro MAINTENANCE MANUAL
YRC1000micro ALARM CODES (MAJOR ALARMS) (MINOR ALARMS)

Please have the following information available when contacting Yaskawa Customer Support:
- System
- Primary Application
- Software Version *(Located on Programming Pendant by selecting: {Main Menu} - {System Info} - {Version})*
  Robot Serial Number *(Located on robot data plate)*
  Robot Sales Order Number *(Located on controller data plate)*

Part Number: 181265-1CD
Revision: 2

Yaskawa Customer Support
- 24-hour Telephone Number: **(937) 847-3200**
  Use for urgent or emergency needs for technical support, service and/or replacement parts
- Routine Technical Inquiries: *techsupport@motoman.com*
  Allow up to 36 hours for response

MANUAL NO.
HW1484498 ②

DANGER

- This manual explains the SST-CCS-PCIE board (manufactured by Molex Corporation) of the YRC1000micro system. Read this manual carefully and be sure to understand its contents before handling the YRC1000micro. Any matter not described in this manual must be regarded as "prohibited" or "improper".
- General information related to safety are described in "Chapter 1. Safety" of the YRC1000micro INSTRUCTIONS. To ensure correct and safe operation, carefully read "Chapter 1. Safety" of the YRC1000micro INSTRUCTIONS.

CAUTION

- In some drawings in this manual, protective covers or shields are removed to show details. Make sure that all the covers or shields are installed in place before operating this product.
- YASKAWA is not responsible for incidents arising from unauthorized modification of its products. Unauthorized modification voids the product warranty.

NOTICE

- The drawings and photos in this manual are representative examples and differences may exist between them and the delivered product.
- YASKAWA may modify this model without notice when necessary due to product improvements, modifications, or changes in specifications. If such modification is made, the manual number will also be revised.
- If your copy of the manual is damaged or lost, contact a YASKAWA representative to order a new copy. The representatives are listed on the back cover. Be sure to tell the representative the manual number listed on the front cover.

Notes for Safe Operation

Read this manual carefully before installation, operation, maintenance, or inspection of the YRC1000micro.

In this manual, the Notes for Safe Operation are classified as “DANGER”, “WARNING”, “CAUTION”, or “NOTICE”.

DANGER

Indicates an imminently hazardous situation which, if not avoided, will result in death or serious injury. Safety Signs identified by the signal word DANGER should be used sparingly and only for those situations presenting the most serious hazards.

WARNING

Indicates a potentially hazardous situation which, if not avoided, will result in death or serious injury. Hazards identified by the signal word WARNING present a lesser degree of risk of injury or death than those identified by the signal word DANGER.

CAUTION

Indicates a hazardous situation, which if not avoided, could result in minor or moderate injury. It may also be used without the safety alert symbol as an alternative to “NOTICE”.

NOTICE

NOTICE is the preferred signal word to address practices not related to personal injury. The safety alert symbol should not be used with this signal word. As an alternative to “NOTICE”, the word “CAUTION” without the safety alert symbol may be used to indicate a message not related to personal injury.

Even items described as “CAUTION” may result in a serious accident in some situations.
At any rate, be sure to follow these important items.

NOTE

To ensure safe and efficient operation at all times, be sure to follow all instructions, even if not designated as “DANGER”, “WARNING” and “CAUTION".

NOTICE

- Do not use or keep the board in the following environmental conditions.
  - Where exposed to direct sunshine
  - Where vibration or impact occurs
  - Where high humidity exists
  - Where a strong magnetic field exists
  - Where much dust exists
  - Where a sudden change in the temperature occurs
  - Where corrosive gases occur
  - Where condensation occurs

Improper usage of the board may damage the board.

DANGER

- Before operating the manipulator, make sure the servo power is turned OFF by performing the following operations. When the servo power is turned OFF, the SERVO ON LED on the programming pendant is turned OFF.
  - Press the emergency stop button on the programming pendant or on the external control device, etc.
  - Disconnect the safety plug of the safety fence. (when in the play mode or in the remote mode)

If operation of the manipulator cannot be stopped in an emergency, personal injury and/or equipment damage may result.

Fig. : Emergency Stop Button

- Before releasing the emergency stop, make sure to remove the obstacle or error caused the emergency stop, if any, and then turn the servo power ON.

Failure to observe this instruction may cause unintended movement of the manipulator, which may result in personal injury.

Fig. : Release of Emergency Stop

- Observe the following precautions when performing a teaching operation within the manipulator's operating range:
  - Be sure to perform lockout by putting a lockout device on the safety fence when going into the area enclosed by the safety fence. In addition, the operator of the teaching operation must display the sign that the operation is being performed so that no other person closes the safety fence.
  - View the manipulator from the front whenever possible.
  - Always follow the predetermined operating procedure.
  - Always keep in mind emergency response measures against the manipulator’s unexpected movement toward a person.
  - Ensure a safe place to retreat in case of emergency.

Failure to observe this instruction may cause improper or unintended movement of the manipulator, which may result in personal injury.

- Confirm that no person is present in the manipulator's operating range and that the operator is in a safe location before:
  - Turning ON the YRC1000micro power
  - Moving the manipulator by using the programming pendant
  - Running the system in the check mode
  - Performing automatic operations

Personal injury may result if a person enters the manipulator's operating range during operation. Immediately press an emergency stop button whenever there is a problem. The emergency stop button is located on the right of the programming pendant.

- Read and understand the Explanation of the Warning Labels before operating the manipulator.

DANGER

- In the case of not using the programming pendant, be sure to supply the emergency stop button on the equipment. Then before operating the manipulator, check to be sure that the servo power is turned OFF by pressing the emergency stop button.
  Connect the external emergency stop button to the 4-14 pin and 5-15 pin of the Safety connector (Safety).
- Upon shipment of the YRC1000micro, this signal is connected by a jumper cable in the dummy connector. To use the signal, make sure to supply a new connector, and then input it.

If the signal is input with the jumper cable connected, it does not function, which may result in personal injury or equipment damage.

WARNING

- Do not touch the inside of the panel for 5 minutes after the power is turned OFF.

The remaining charged voltage in the capacitor may cause an electric shock or an injury.

- Do not touch the board while the power is turned ON.

Failure to observe this warning may result in a fire or an electric shock.

- Perform the following inspection procedures prior to conducting manipulator teaching. If there is any problem, immediately take necessary steps to solve it, such as maintenance and repair.
  - Check for a problem in manipulator movement.
  - Check for damage to insulation and sheathing of external wires.
- Return the programming pendant to a safe place after use.

If the programming pendant is left unattended on the manipulator, on a fixture, or on the floor, etc., the Enable Switch may be activated due to surface irregularities of where it is left, and the servo power may be turned ON. In addition, in case the operation of the manipulator starts, the manipulator or the tool may hit the programming pendant left unattended, which may result in personal injury and/or equipment damage.

- The wiring and mounting must be performed by authorized and qualified personnel.

Failure to observe this caution may result in fire or electric shock.

CAUTION

- Make sure that there is no foreign matter such as metal chips on the board.

In case of malfunction, etc. it may result in an injury or damage the board.

- Make sure that there is no damage or deflection of parts on the board.

In case of malfunction, etc. it may result in an injury or damage the board.

- Correctly connect each cable and connector.

Failure to observe this caution may result in a fire or damage the board.

- Set the switches, etc. correctly.

Malfunction, caused by an incorrect setting, may result in an injury or damage the board.

- Never touch the soldered surfaces of the board directly with fingers.

Protrusions on the soldered surface may result in an injury.

NOTICE

- Never touch the mounting surfaces of the board parts directly with fingers.

The generated static electricity may damage the IC.

- No shock to the board.

The shock may damage the board.

Definition of Terms Used Often in This Manual

The MOTOMAN is the YASKAWA industrial robot product.

The MOTOMAN usually consists of the manipulator, the YRC1000micro controller, manipulator cables, the YRC1000micro programming pendant (optional), and the YRC1000micro programming pendant safety signal short circuit connector (optional).

In this manual, the equipment is designated as follows:

Equipment	Manual Designation
YRC1000micro controller	YRC1000micro
YRC1000micro programming pendant	Programming pendant (optional)
Cable between the manipulator and the controller	Manipulator cable
YRC1000micro programming pendant safety signal short circuit connector	Programming pendant safety signal short circuit connector (optional)

Descriptions of the programming pendant keys, buttons, and displays are shown as follows:

Equipment		Manual Designation
Programming Pendant	Character Keys /Symbol Keys	The keys which have characters or symbols printed on them are denoted with [ ]. e.g. [ENTER]
	Axis Keys /Numeric Keys	[Axis Key] and [Numeric Key] are generic names for the keys for axis operation and number input.
	Keys pressed simultaneously	When two keys are to be pressed simultaneously, the keys are shown with a “+” sign between them, e.g. [SHIFT]+[COORD].
	Mode Switch	Mode Switch can select three kinds of modes that are denoted as follows: REMOTE, PLAY or TEACH. (The switch names are denoted as symbols)
	Button	The three buttons on the upper side of the programming pendant are denoted as follows: START, HOLD, or EMERGENCY STOP. (The button names are denoted as symbols)
	Displays	The menu displayed in the programming pendant is denoted with { }. e.g. {JOB}

Description of the Operation Procedure

In the explanation of the operation procedure, the expression "Select • • • " means that the cursor is moved to the object item and [SELECT] is pressed, or that the item is directly selected by touching the screen.

Registered Trademark

In this manual, names of companies, corporations, or products are trademarks, registered trademarks, or brand names for each company or corporation. The indications of (R) and TM are omitted.

Contents

1 Outline 1-1

1.1 System Configuration 1-2

2 Hardware Specifications 2-1

2.1 External View of the CCS-PCIE Board 2-1

2.2 CCS-PCIE Specifications 2-2

2.3 Communication Specifications 2-4

3 Mounting the CCS-PCIE Board 3-1

4 I/O Signal Allocation 4-1

4.1 Setting of Optional Board and I/O Module 4-1

4.2 External I/O Setting 4-7

4.3 Transmitting Data 4-12

4.3.1 YRC1000micro I/O Allocation Example 4-13

4.3.2 Board Status 4-15

4.4 Relationship with the Sending / Receiving Data of the CC-Link and the I/O Data 4-21

4.4.1 Data Classification 4-21

4.4.2 User Area and System Area 4-22

4.4.3 Details and Control of System Area 4-24

5 Network Specifications 5-1

5.1 CC-Link Terminal Units 5-1

5.2 Number of Connected Stations of Each Terminal Unit 5-2

5.3 Construction and Specifications of Network System 5-4

6 Error Indication 6-1

1 Outline

This manual describes the CC-Link I/O board SST-CCS-PCIE (hereafter CCS-PCIE) (manufactured by Molex Corporation) to be used in the YRC1000micro. The application of the CCS-PCIE board enables the exchange of general-purpose I/O data and register data between a CC-link device and the YRC1000micro. The CCS-PCIE board is designed only as a remote device station and cannot be used as a master station.

The CCS-PCIE board conforms to CC-Link Remote Net Ver 1 mode and Remote Net Ver 2 mode.

1.1 System Configuration

The following diagram shows an example of the configuration of a system with an CCS-PCIE board.

> **NOTE** In the master station network configuration, set the CCS-PCIE board as a remote device station.

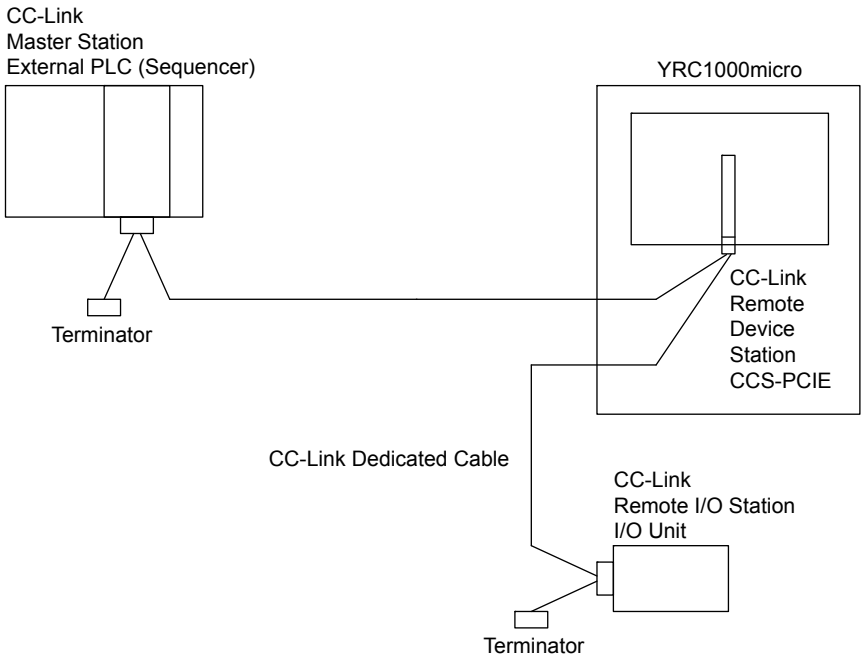

The CCS-PCIE board does not include a CC-Link dedicated cable or an external terminator.

> **NOTE** When the CCS-PCIE board is connected at the end of the network, connect the external terminator to the CCS-PCIE board. If the terminator is not correctly connected, communications may not be performed. The value of resistance and the connection method differ depending on the cable type and the cable connection method. For details, refer to "Cable Wiring Manual" published by the CC-Link Partner Association.

CC-Link is a registered trademark of the CLPA (CC-Link Partner Association).

2 Hardware Specifications

2.1 External View of the CCS-PCIE Board

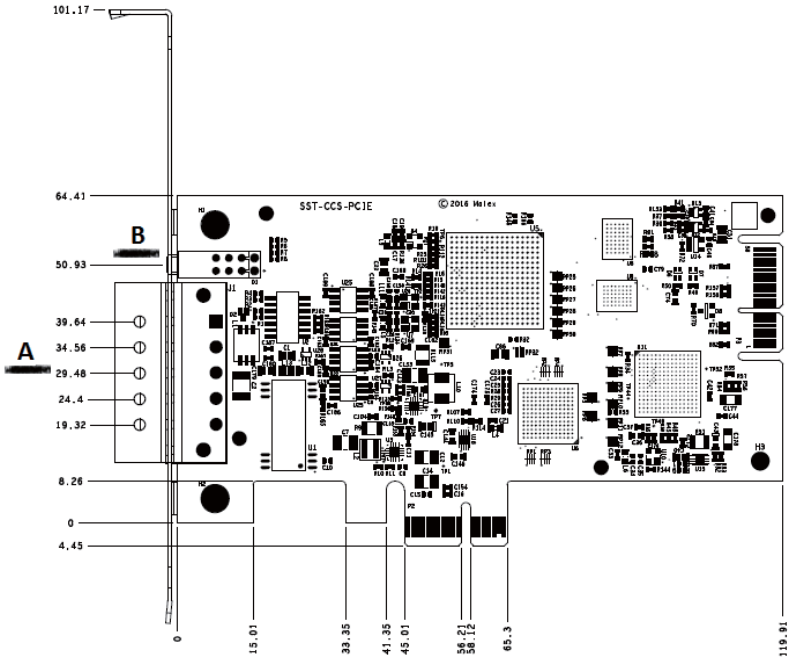

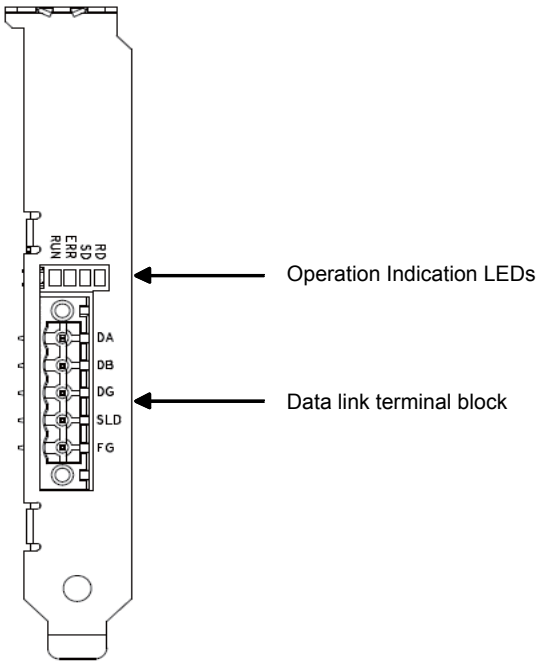

2.2 CCS-PCIE Specifications

Items	Specifications
Interface to external device	CC-Link
Board mounting position	PCI Express slot in the YRC1000micro
Error indicator	LED indicators
Number of transmission I/O points	Maximum number of I/O points: Input: 880 output: 880 (4 CC-Link stations occupied/8-time setting) Number of I/O points Remote Net Ver 1 mode Input: 16 output: 16 (1 CC-Link station occupied/extended cyclic setting unavailable (1 time)) Input: 112 output: 112 (4 CC-Link stations occupied/extended cyclic setting unavailable (1 time)) Remote Net Ver 2 mode Input: 16 output: 16 (1 CC-Link station occupied/1-time setting) Input: 16 output: 16 (1 CC-Link station occupied/2-time setting) Input: 48 output: 48 (1 CC-Link station occupied/4-time setting) Input: 112 output: 112 (1 CC-Link station occupied/8-time setting) Input: 48 output: 48 (2 CC-Link stations occupied/1-time setting) Input: 80 output: 80 (2 CC-Link stations occupied/2-time setting) Input: 176 output: 176 (2 CC-Link stations occupied/4-time setting) Input: 368 output: 368 (2 CC-Link stations occupied/8-time setting) Input: 80 output: 80 (3 CC-Link stations occupied/1-time setting) Input: 144 output: 144 (3 CC-Link stations occupied/2-time setting) Input: 304 output: 304 (3 CC-Link stations occupied/4-time setting) Input: 624 output: 624 (3 CC-Link stations occupied/8-time setting) Input: 112 output: 112 (4 CC-Link stations occupied/1-time setting) Input: 208 output: 208 (4 CC-Link stations occupied/2-time setting) Input: 432 output: 432 (4 CC-Link stations occupied/4-time setting) Input: 880 output: 880 (4 CC-Link stations occupied/8-time setting)

Items	Specifications					
Number of transmission I/O points	Number of I/O registers					
	Remote Net Ver 1 mode	Input:	4	output:	4	(1 CC-Link station occupied/extended cyclic setting unavailable (1 time))
		Input:	16	output:	16	(4 CC-Link stations occupied/extended cyclic setting unavailable (1 time))
	Remote Net Ver 2 mode	Input:	4	output:	4	(1 CC-Link station occupied/1-time setting)
		Input:	8	output:	8	(1 CC-Link station occupied/2-time setting)
		Input:	16	output:	16	(1 CC-Link station occupied/4-time setting)
		Input:	32	output:	32	(1 CC-Link station occupied/8-time setting)
		Input:	8	output:	8	(2 CC-Link stations occupied/1-time setting)
		Input:	16	output:	16	(2 CC-Link stations occupied/2-time setting)
		Input:	32	output:	32	(2 CC-Link stations occupied/4-time setting)
		Input:	64	output:	64	(2 CC-Link stations occupied/8-time setting)
		Input:	12	output:	12	(3 CC-Link stations occupied/1-time setting)
		Input:	24	output:	24	(3 CC-Link stations occupied/2-time setting)
		Input:	48	output:	48	(3 CC-Link stations occupied/4-time setting)
		Input:	96	output:	96	(3 CC-Link stations occupied/8-time setting)
		Input:	16	output:	16	(4 CC-Link stations occupied/1-time setting)
		Input:	32	output:	32	(4 CC-Link stations occupied/2-time setting)
		Input:	64	output:	64	(4 CC-Link stations occupied/4-time setting)
		Input:	128	output:	128	(4 CC-Link stations occupied/8-time setting)

2.3 Communication Specifications

Items	Specifications
Transmission speed	10 Mbps / 5 Mbps / 2.5 Mbps / 625 kbps / 156 kbps
Communication method	Broadcast polling method
Transmission channel	Bus type
Number of nodes	Maximally 64 Slave station: 1 to 64
Station type	Local station
Operation mode	Ver 1, Ver 2
Parameter mode	Fixed to Remote Net mode
Extended cyclic	Remote Net Ver 1: Fixed to 1 time, Remote Net Ver 2: 1 time, 2 times, 4 times, 8 times
Number of occupied stations	Remote Net Ver 1: 1 or 4 stations, Remote Net Ver 2: 1 to 4 stations

3 Mounting the CCS-PCIE Board

NOTE

Request a YASKAWA sales representative to mount the board inside the YRC1000micro.

The product warranty will be void if the customer mounts the board.

4 I/O Signal Allocation

4.1 Setting of Optional Board and I/O Module

In order to use the CCS-PCIE board on the YRC1000micro, perform the setting of the optional board and I/O module in the following manner.

SUPPLE -MENT

Set the optional board and I/O module in the management mode.
In the operation mode and the editing mode, the settings are for reference only.

1. Turn ON the power supply while pressing [MAIN MENU].
   – The main menu appears.

2. Set the security mode to the “MANAGEMENT MODE”.
3. Select {SYSTEM} under the main menu
   – The sub menu appears.

4. Select {SETUP}.
   – The SETUP display appears.

5. Select "OPTION BOARD".
   – The OPTION BOARD display appears.

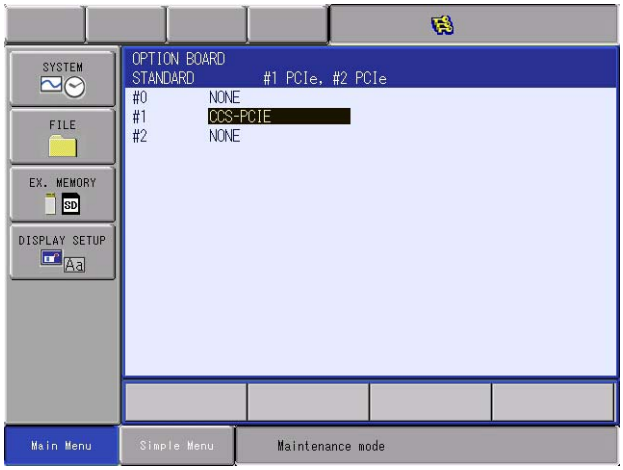

6. Select "CCS-PCIE ".
   - The CCS-PCIE setup display appears.
   - Set the items on the display.

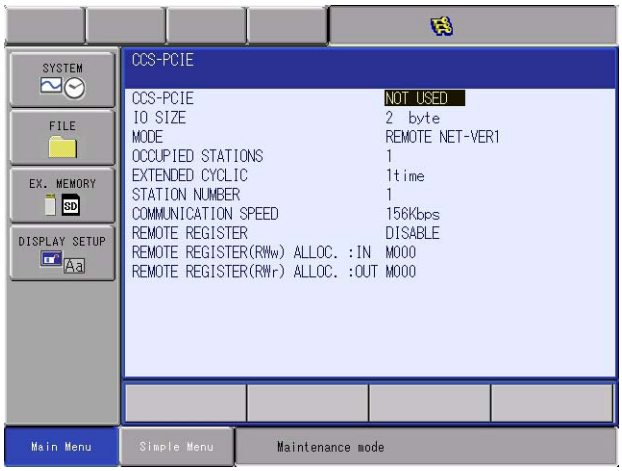

Explanation of Setup Items

①CCS-PCIE

Selects whether to use the CCS-PCIE board.

②I/O SIZE

Displays the size of input/output to send and receive data.
The displayed value is a result of automatic calculation and cannot be changed directly here.

③MODE

Sets CC-Link operation mode.
Selects the mode among REMOTE NET VER 1 and REMOTE NET VER 2.

④OCCUPIED STATIONS

Sets the number of the CC-Link occupied station.
Selects the station among 1 occupied station, 2 occupied stations, 3 occupied stations, and 4 occupied stations.

⑤EXTENDED CYCLIC

Sets CC-Link extended cyclic settings.
When REMOTE NET VER 1 is selected: Fixed to 1 time and no changes can be made.
When REMOTE NET VER 2 is selected: Selects the setting among 1time, 2times, 4times, and 8times.

⑥STATION NUMBER

Sets the CC-Link station number. The setting varies depending on the number of occupied stations.
When 1 station is occupied: 1 to 64
When 2 stations are occupied: 1 to 63
When 3 stations are occupied: 1 to 62
When 4 stations are occupied: 1 to 61

⑦COMMUNICATION SPEED

Sets the CC-Link communication speed. Selects the speed among 156 k/625 k/2.5 M/5 M/10 M/bps.

⑧REMOTE REGISTER

Sets whether to allocate the CC-Link remote register to the YRC1000micro M-register.

⑨REMOTE REGISTER (RWw) ALLOC. : IN

Sets the first numbers of the YRC1000micro M-register when the CC-Link remote register (RWw) is allocated to the YRC1000micro M-register.
From M000 to M559 can be used. Set the first number of M register numbers. (RWw) is the data sent from the master station to the remote device station.

⑩REMOTE REGISTER (RWr) ALLOC. : OUT

Sets the first numbers of the YRC1000micro M-register when the CC-Link remote register (RWr) is allocated to the YRC1000micro M-register.
From M000 to M999 can be used. Set the first number of M register numbers. (RWr) is the data sent from the remote device station to the master station.

NOTE

Before allocating the CC-Link remote register to the M-register, make sure to use the M-register No. that is not used for other applications. If the M-register is duplicated, the remote register data may not be correctly transmitted between the master station and the remote device station.

7. Press [ENTER].
   – The confirmation dialog box appears.

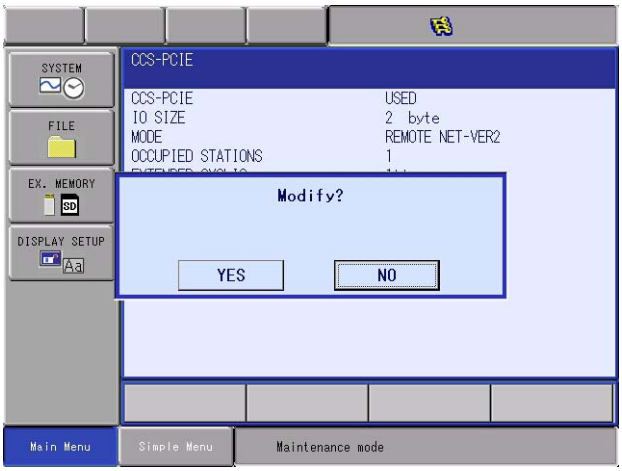

8. Select {YES}.
   - The IO MODULE display appears.
     The message, "Select 'Safety Board FLASH Reset'." appears, however, do not perform 'Safety Board FLASH Reset' this time, but perform the settings continuously.

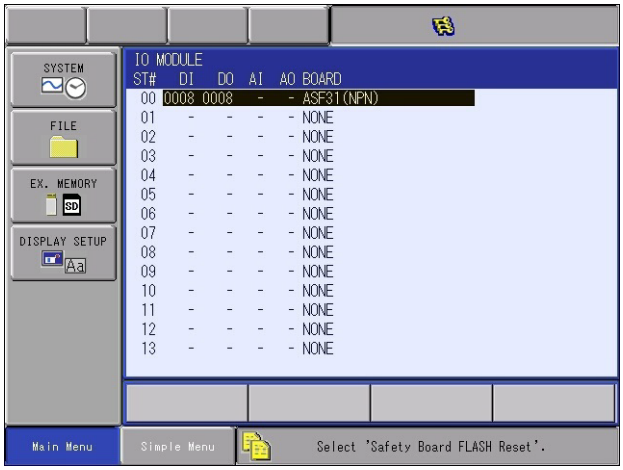

9. Press [ENTER].
   - The rest of the I/O module display appears, and "CCS-PCIE" is displayed.
   - The I/O points is displayed under "DI/DO" according to the number of the occupied station that is set on the "OPTION BOARD" display.

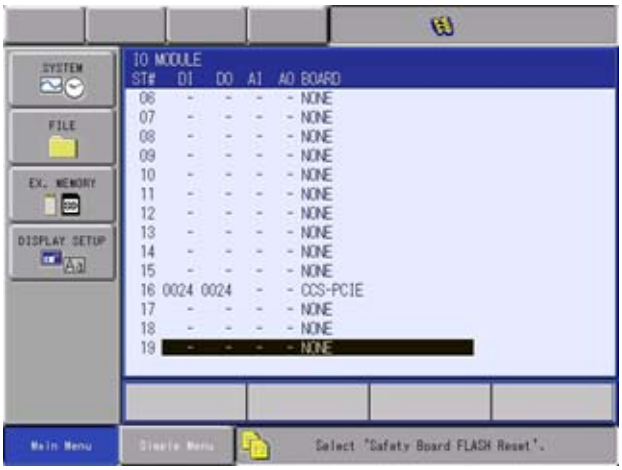

SUPPLE-MENT

The DI/DO points can be found using the I/O size on the set up display in the following equation:

DI/DO points = (I/O size × 8) + 8

"+ 8" : the I/O points for status

10. Press [ENTER].
    – The confirmation dialog box appears.

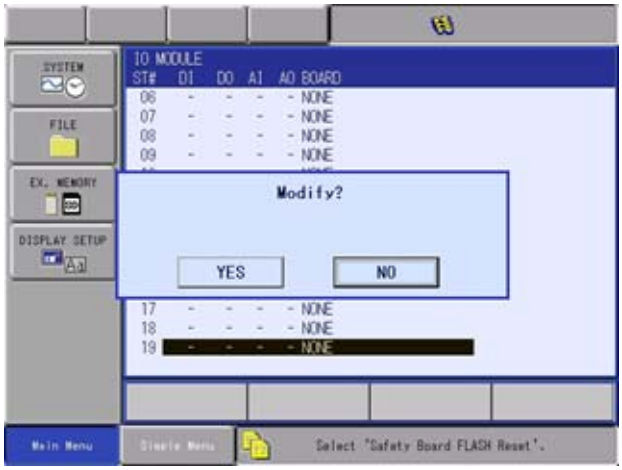

11. Select {YES}.
    – Select “YES” if the display corresponds to the current mounted status of the I/O modules. The I/O module setting is updated, and the IO MODULE window changes to the EXTERNAL IO SETUP window.

4.2 External I/O Setting

1. The EXTERNAL IO SETUP window appears.

2. Select {AUTO} or {MANUAL} in the ALLOCATION MODE.
   – The selection menu appears after selecting {AUTO} or {MANUAL}.

NOTE

If the allocation mode is changed from {MANUAL} to {AUTO}, the set allocation data is discarded. The data will be allocated by AUTO MODE again. Save the set allocation data to the external devices in advance, if needed.

3. Select the allocation mode to set up.
   - Select {AUTO} to allocate I/O signal allocation automatically. Select {MANUAL} to allocate I/O signal allocation manually.
   - The selected allocation mode is set up.

4. Select {DETAIL} of {EXTERNAL IO ALLOCATION}.
   - When select {AUTO}, the following procedures No.5 to 7 are not necessary. Operate the procedure from No.8.
   - When select {MANUAL], operate the following procedures No.5 to 7 accordant with the setting manually.

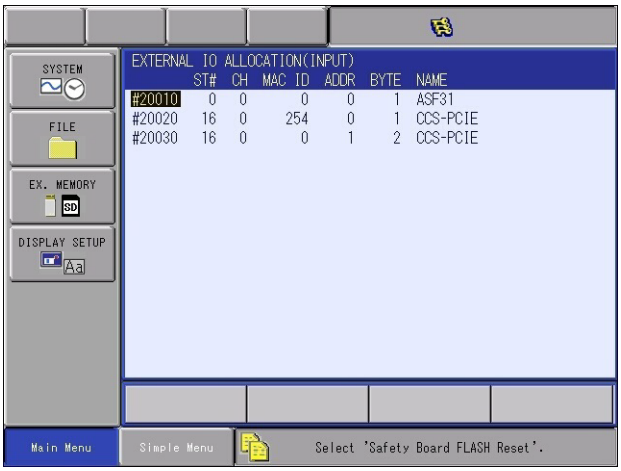

5. Select the external I/O signal number (at the change source) to be changed. (In the setting example, select “#20020”.)

   – The select menu appears.

6. Select {MODIFY], and input the external input signal number (at the change destination) to be changed. (In the setting example, enter “#20200”.)

   – The external input signal number is changed.

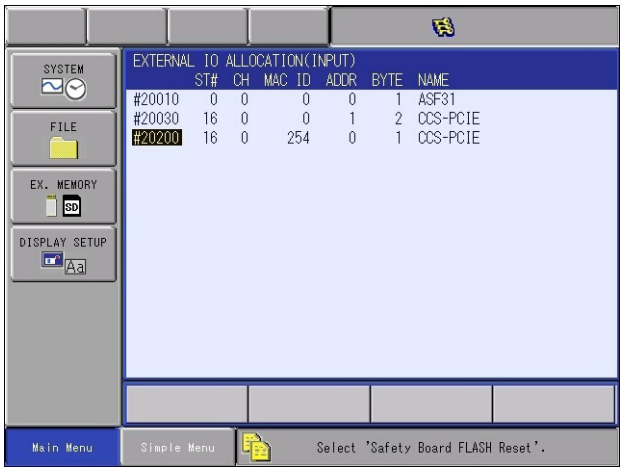

7. Likewise, select/modify the number of the external input signal.

   – Repeat select/modify until it becomes the desired allocation to set up.

8. Press {ENTER].
   – The allocation window of the external output signal appears.

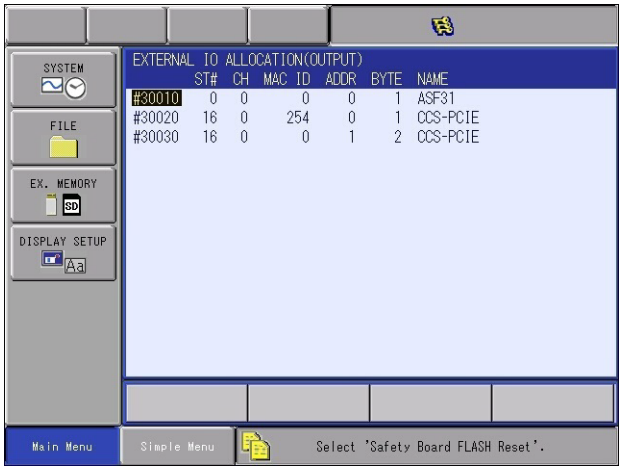

9. Select/modify the number of the external output signal same as the external input signal.
   – Repeat select/modify until it becomes the desired allocation to set up.
10. Press {ENTER].
   – Confirmation dialog appears.

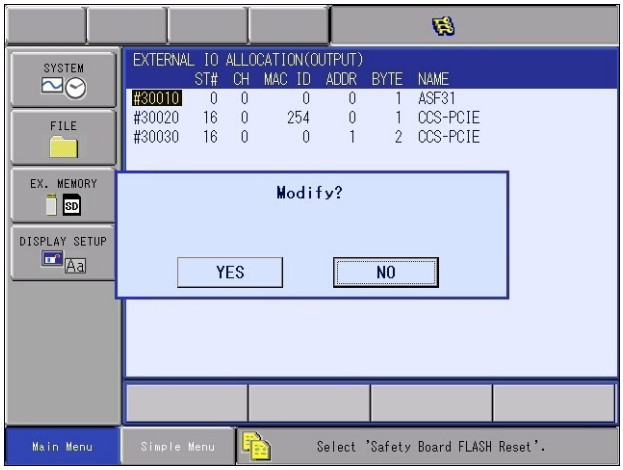

11. Select {YES].
   – The settings are confirmed, and returns to the SETUP window.

12. Change the security mode to the safety mode.
13. Select [FILE]- [INITIALIZE].
    – The INITIALIZE window appears.

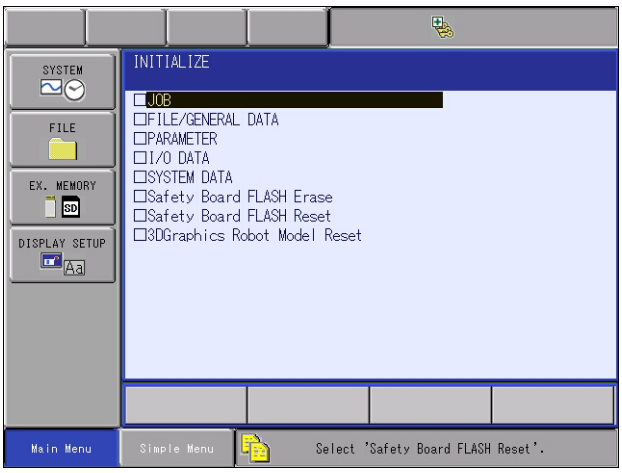

14. Select "Safety Board FLASH Reset".
    – The confirmation dialog box appears.

15. Select {YES}.
    – The setting is completed after beep sound.

4.3 Transmitting Data

The data to be transmitted from the CCS-PCIE board to inside of the YRC1000micro is not only the I/O data from the external device connected to the CC-Link, but also the status of the CCS-PCIE board.

Therefore, inside the YRC1000micro, 8 points (1 byte) for both input and output are reserved for the status of the CCS-PCIE board beside the area for the digital data. The output area, however, cannot be used.

The transmission data from the CCS-PCIE board are allocated to the external I/O signals of concurrent I/O and the M-registers.

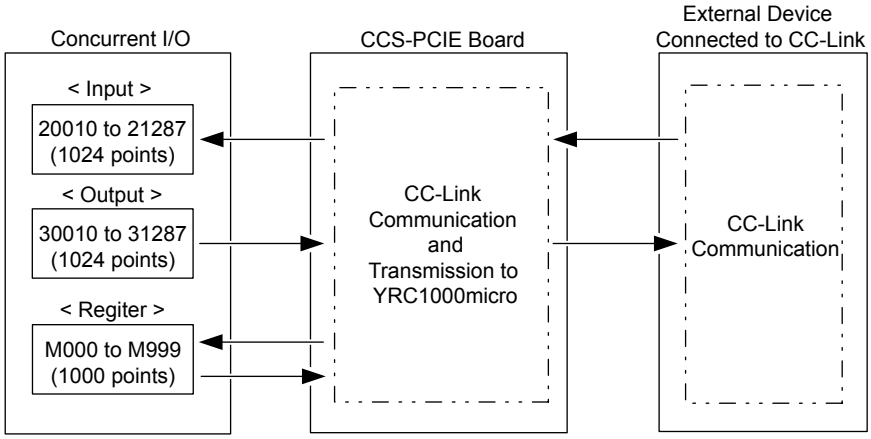

Where only an CCS-PCIE (4 CC-Link stations occupied/1-time) is mounted as an optional I/O board, the concurrent I/O allocation of each board is shown in the following table.

Furthermore, the following table shows the remote register allocation of word data when the remote register allocation (RWw) is set to M000 and the remote register allocation (RWr) is set to M016.

4.3.1 YRC1000micro I/O Allocation Example

Note1) The following example is for the standard setting. When change the allocation of the external output signal or the concurrent ladder program, the allocation changes in accordance with the changes.

Note2) As for the input data/output data of ASF30 (standard I/O), refer to "YRC1000micro INSTRUCTIONS (RE-CTO-A222)" for more details.

ASF30 (standard I/O)	I/O Input	External input signal	User input signal	Details
		20010 to 20017	None (allocated on the system)	Input data
	I/O Output	External output signal	User output signal	Details
		30010 to 30017	None (allocated on the system)	Output data
CCS-PCIE (CC-Link)	I/O Input	External input signal	User input signal	Details
		20020 to 20027	00020 to 00027(IN0009 to IN0016)	Board status 1)
		20030 to 20037	00030 to 00037(IN0017 to IN0024)	Input data(1)
		20040 to 20047	00040 to 00047(IN0025 to IN0032)	Input data(2)
		20050 to 20057	00050 to 00057(IN0033 to IN0040)	Input data(3)
		20060 to 20067	00060 to 00067(IN0041 to IN0048)	Input data(4)
		20070 to 20077	00070 to 00077(IN0049 to IN0056)	Input data(5)
		20080 to 20087	00080 to 00087(IN0057 to IN0064)	Input data(6)
		20090 to 20097	00090 to 00097(IN0065 to IN0072)	Input data(7)
		20100 to 20107	00100 to 00107(IN0073 to IN0080)	Input data(8)
		20110 to 20117	00110 to 00117(IN0081 to IN0088)	Input data(9)
		20120 to 20127	00120 to 00127(IN0089 to IN0096)	Input data(10)
		20130 to 20137	00130 to 00137(IN0097 to IN0104)	Input data(11)
		20140 to 20147	00140 to 00147(IN0105 to IN0112)	Input data(12)
		20150 to 20157	00150 to 00157(IN0113 to IN0120)	Input data(13)
		20160 to 20167	00160 to 00167(IN0121 to IN0128)	Input data(14)
	I/O Output	External output signal	User output signal	Details
		30020 to 30027	10020 to 10027(OT0009 to OT0016)	System reservation 1)
		30030 to 30037	10030 to 10037(OT0017 to OT0024)	Output data(1)
		30040 to 30047	10040 to 10047(OT0025 to OT0032)	Output data(2)
		30050 to 30057	10050 to 10057(OT0033 to OT0040)	Output data(3)
		30060 to 30067	10060 to 10067(OT0041 to OT0048)	Output data(4)
		30070 to 30077	10070 to 10077(OT0049 to OT0056)	Output data(5)
		30080 to 30087	10080 to 10087(OT0057 to OT0064)	Output data(6)
		30090 to 30097	10090 to 10097(OT0065 to OT0072)	Output data(7)
		30100 to 30107	10100 to 10107(OT0073 to OT0080)	Output data(8)
		30110 to 30117	10110 to 10117(OT0081 to OT0088)	Output data(9)
		30120 to 30127	10120 to 10127(OT0089 to OT0096)	Output data(10)
		30130 to 30137	10130 to 10137(OT0097 to OT0104)	Output data(11)
		30140 to 30147	10140 to 10147(OT0105 to OT0112)	Output data(12)
		30150 to 30157	10150 to 10157(OT0113 to OT0120)	Output data(13)
		30160 to 30167	10160 to 10167(OT0121 to OT0128)	Output data(14)

		Register number	Details
CCS-PCIE (CC-Link)	Remote register (RWw) allocation	M000	Input word data (1)
		M001	Input word data (2)
		M002	Input word data (3)
		M003	Input word data (4)
		M004	Input word data (5)
		M005	Input word data (6)
		M006	Input word data (7)
		M007	Input word data (8)
		M008	Input word data (9)
		M009	Input word data (10)
		M010	Input word data (11)
		M011	Input word data (12)
		M012	Input word data (13)
		M013	Input word data (14)
		M014	Input word data (15)
		M015	Input word data (16)
	Remote register (RWr) allocation	Register number	Details
		M016	Output word data (1)
		M017	Output word data (2)
		M018	Output word data (3)
		M019	Output word data (4)
		M020	Output word data (5)
		M021	Output word data (6)
		M022	Output word data (7)
		M023	Output word data (8)
		M024	Output word data (9)
		M025	Output word data (10)
		M026	Output word data (11)
		M027	Output word data (12)
		M028	Output word data (13)
		M029	Output word data (14)
		M030	Output word data (15)
		M031	Output word data (16)

1 Board status and system reservation cannot be allocated as IO signal.
Also, this data is not able to transmit by CC-Link.
(Unable to communicate with the main PLC.)

4.3.2 Board Status

[CCS-PCIE board status]

The first one byte (20020 to 20027 in the allocation example above) of the input data of the CCS-PCIE allocated to the external input signal indicates the board status of the CCS-PCIE.

Signal	Contents
2xxx0 to 2xxx3	Reserved for the manufacturer. The user cannot use these signals.
2xxx4	CPU error status of the master station sequencer Normal: 0 Error: 1
2xxx5	CC-Link communication setting value Normal: 0 Error: 1
2xxx6	Indicates the CC-Link communication status. Normal: 0 Error: 1
2xxx7	Indicates the operation status of the CCS-PCIE board. Normal: 0 Error: 1

NOTE

In the case below, 2xxx6 CC-Link communication status is "Normal: 0".
To check whether these settings are correct, actually send and receive the IO signal.

- When the CPU operation of the master station is set to STOP.
- When other slave stations and the occupied station number is duplicated.
- When the number of occupied stations of the master station is more than the number of occupied stations of the slave station.
- When the extended cyclic settings of the master station are more than the cyclic settings of the slave station.

[The Alarm when Communications Error Occurs Using the Board Status]

When the optional board detects the communication error, by using the CIO ladder or the user alarm allows to occur the alarm.

The examples of the method are described in below.

There are two alarms of the occurrence alarms.

- IO Board operation error
- IO Communication error

As for the user alarm registration, refer to “Chap.13.7 I/O Messages and I/O Alarms” in "YRC1000micro OPTIONS INSTRUCTIONS FOR Concurrent I/O (RE-CKI-A469)" for more details.

[Alarm No.] Alarm name	Signal No. (Board status signal)	Description of the alarm
[9065] IO BOARD OPERATION ERROR	20027 (Board status signal: 2xxx7)	The operation status of the board is abnormal.
[9066] IO COMMUNICATION ERROR	20026 (Board status signal: 2xxx6)	The communication status is abnormal.

When the optional board detects and alerts the error by the board status signal, the ladder program, which raises an alarm, is created according to the error signal.

The procedures to register the alarms above as the user alarm and the ladder program, which alert an alarm, are described below.

■ Register the User Alarm

1. Change the security mode to the “Management Mode”.
2. Select the {I/O ALARM} from the {IN/OUT} in the main menu.

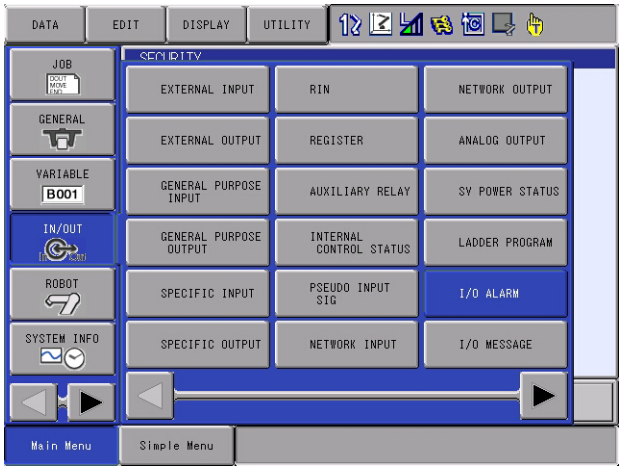

3. I/O alarm (user) window appears.

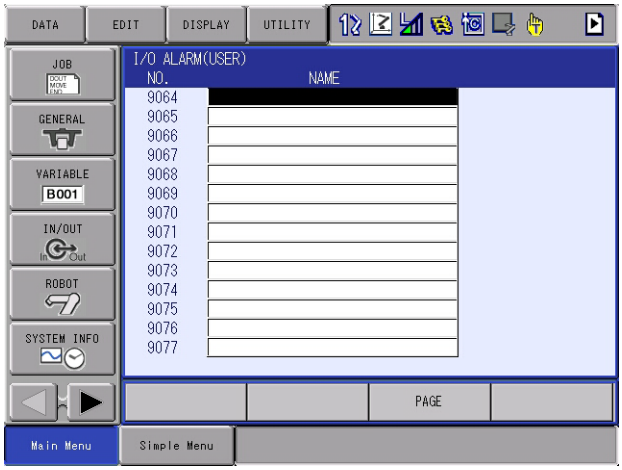

4. Move the cursor over the desired No. to register, and press [SELECT].
   – The window changes to the character string entry window.

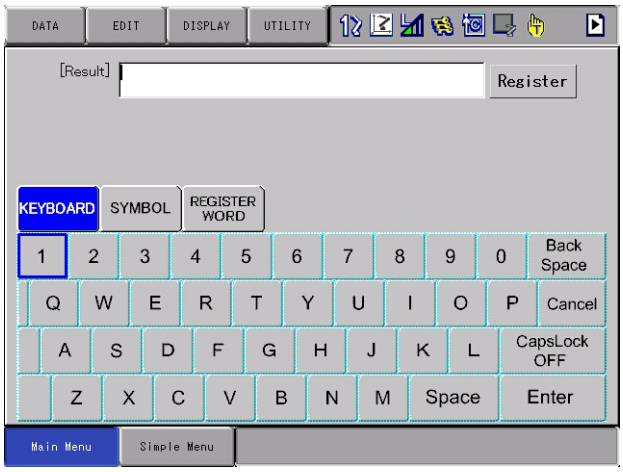

5. Enter the I/O alarm name.

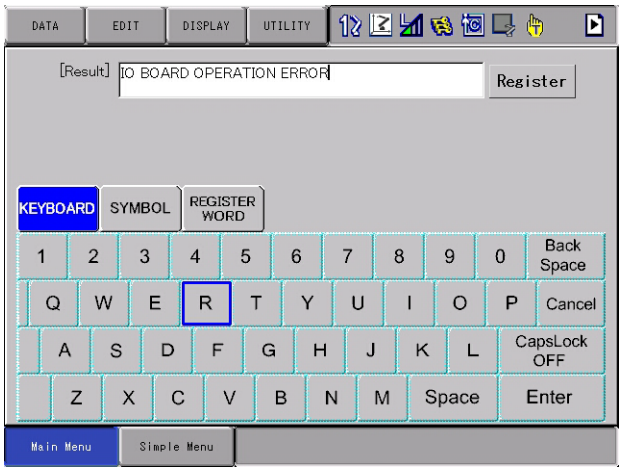

6. Press [ENTER].
   – The entered alarm is registered.

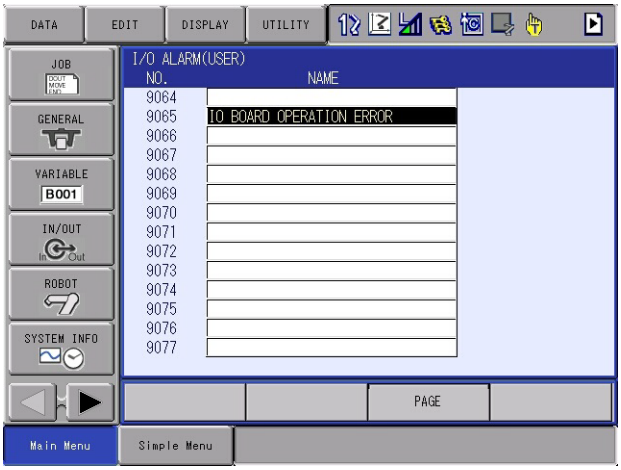

7. Register the other alarms.
   – Repeat the same procedures to register the alarm to use.

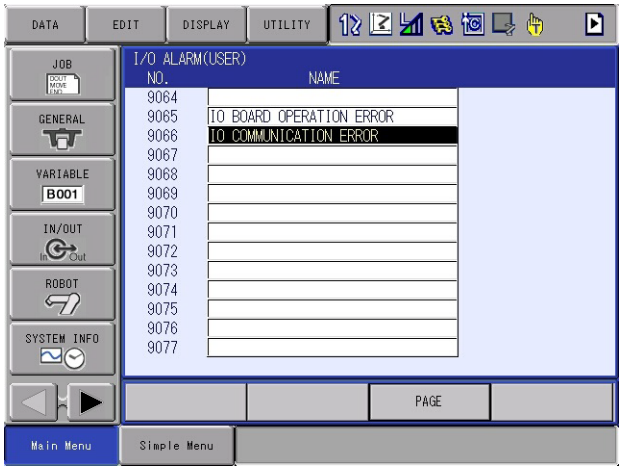

IO Allocation and the Ladder Program

Create the ladder program to alert the alarm by using the following signals when the optional board detects an error.

External input

Signal	Description
20026	Optional board status (IO communication status)
20027	Optional board status (Board operation status)

System input signal

Signal	Description
40012	User part alarm requirement
40220	User part alarm code d0
40221	User part alarm code d1
40222	User part alarm code d2
40223	User part alarm code d3
40224	User part alarm code d4
40225	User part alarm code d5

Assistant relay

Signal	Description
70017	Turned ON the control power supply (continuously ON)

The ladder program (the figure of the ladder)

Creating the following ladder allows to alert the alarm according to the status error signals of the optional board.

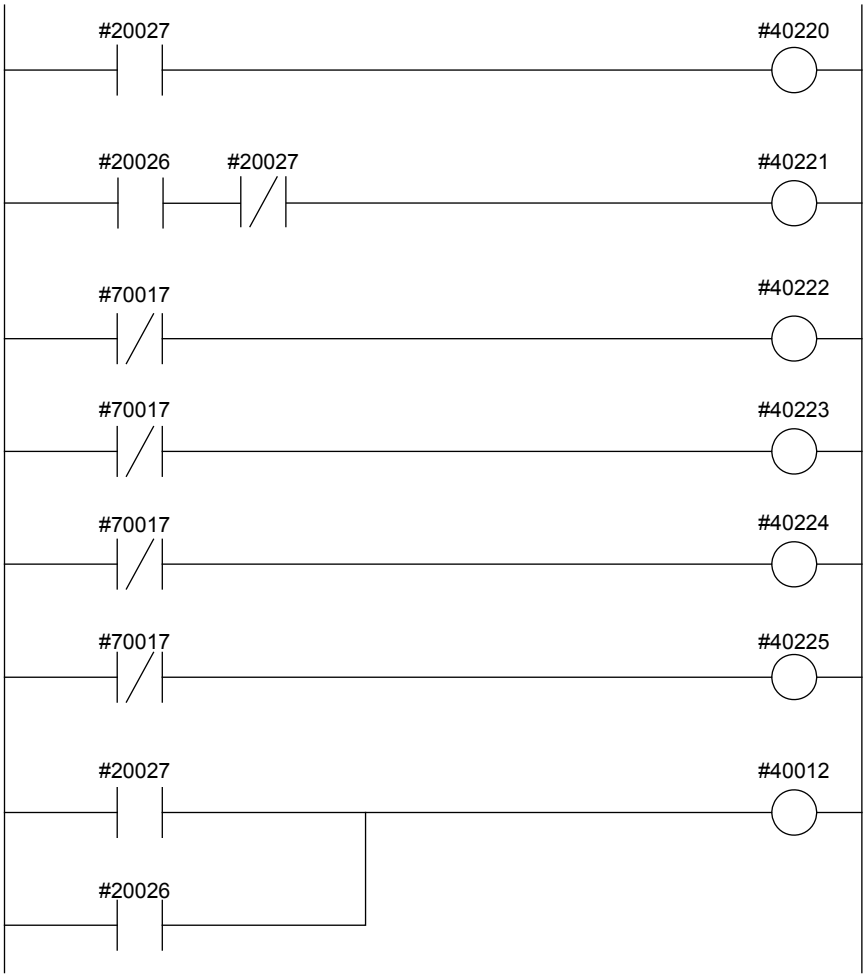

4.4 Relationship with the Sending / Receiving Data of the CC-Link and the I/O Data

4.4.1 Data Classification

For sending and receiving data with the CC-Link, 4 types of data exist: Remote input (RX), remote output (RY), remote register (RWr) and remote register (RWw).

- Remote input (RX), remote output (RY)
  Bit data sent and received in communication with the master station. When looking from the master station, input data is indicated as RX, and output data is indicated as RY. Exchange the data with each YRC1000micro external output signal (#3xxxx) and YRC1000micro external input signal (#2xxxx).
- Remote register (RWr), remote register (RWw)
  Word data sent and received in communication with the master station.
  When looking from the master station, input data is indicated as RWr, and output data is indicated as RWw. Exchange the data with YRC1000micro M register.

Fig. 4-1: Correlation Between Sending and Receiving Data

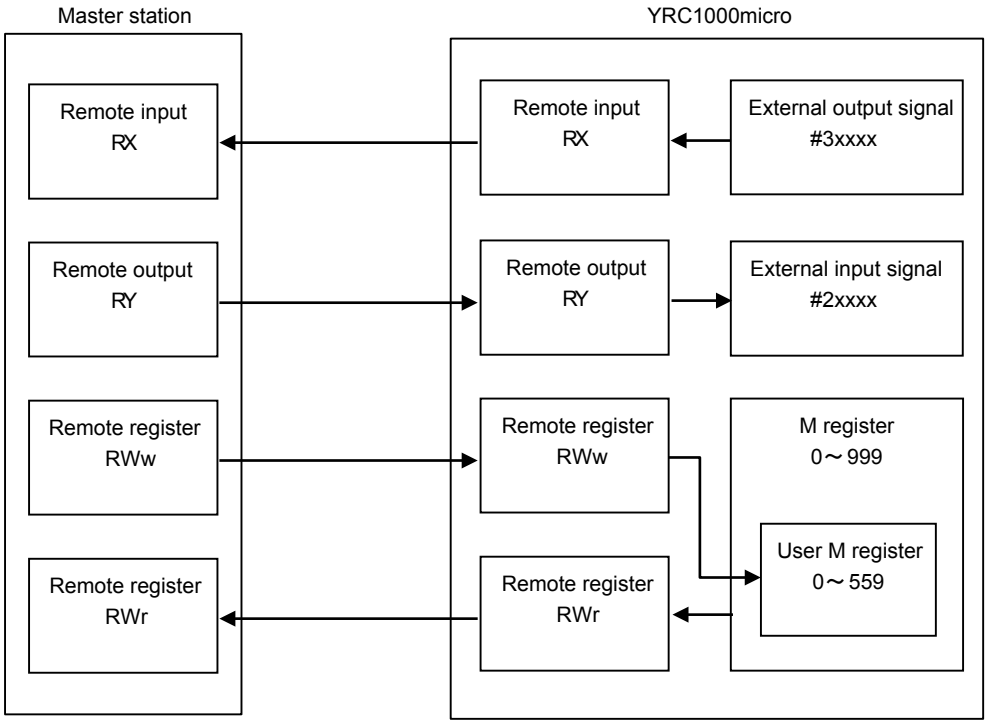

4.4.2 User Area and System Area

The number of I/O points indicated in *chapter 2.2 "CCS-PCIE Specifications"* of this instruction manual indicates only points of the user area which the customer can use in sending and receiving the bit data. In the actual sending and receiving of bit data, the 16 points of the system area other than the user area which is indicated in the CCS-PCIE specifications are included.

The relationship between the remote I/O points and the number of occupied stations in Remote Net Ver.1 is shown below.

As the same also applies to Remote Net Ver.2, the actual sent and received bit data include the 16 points of the system area other than the user area which the customer is available to use.

	Remote input (RX)	**Remote output (RY)**
One CC-Link station occupied	User area 16 points + system area 16 points	User area 16 points + system area 16 points
Two CC-Link stations occupied	User area 48 points + system area 16 points	User area 48 points + system area 16 points
Three CC-Link stations occupied	User area 80 points + system area 16 points	User area 80 points + system area 16 points
Four CC-Link stations occupied	User area 112 points + system area 16 points	User area 112 points + system area 16 points

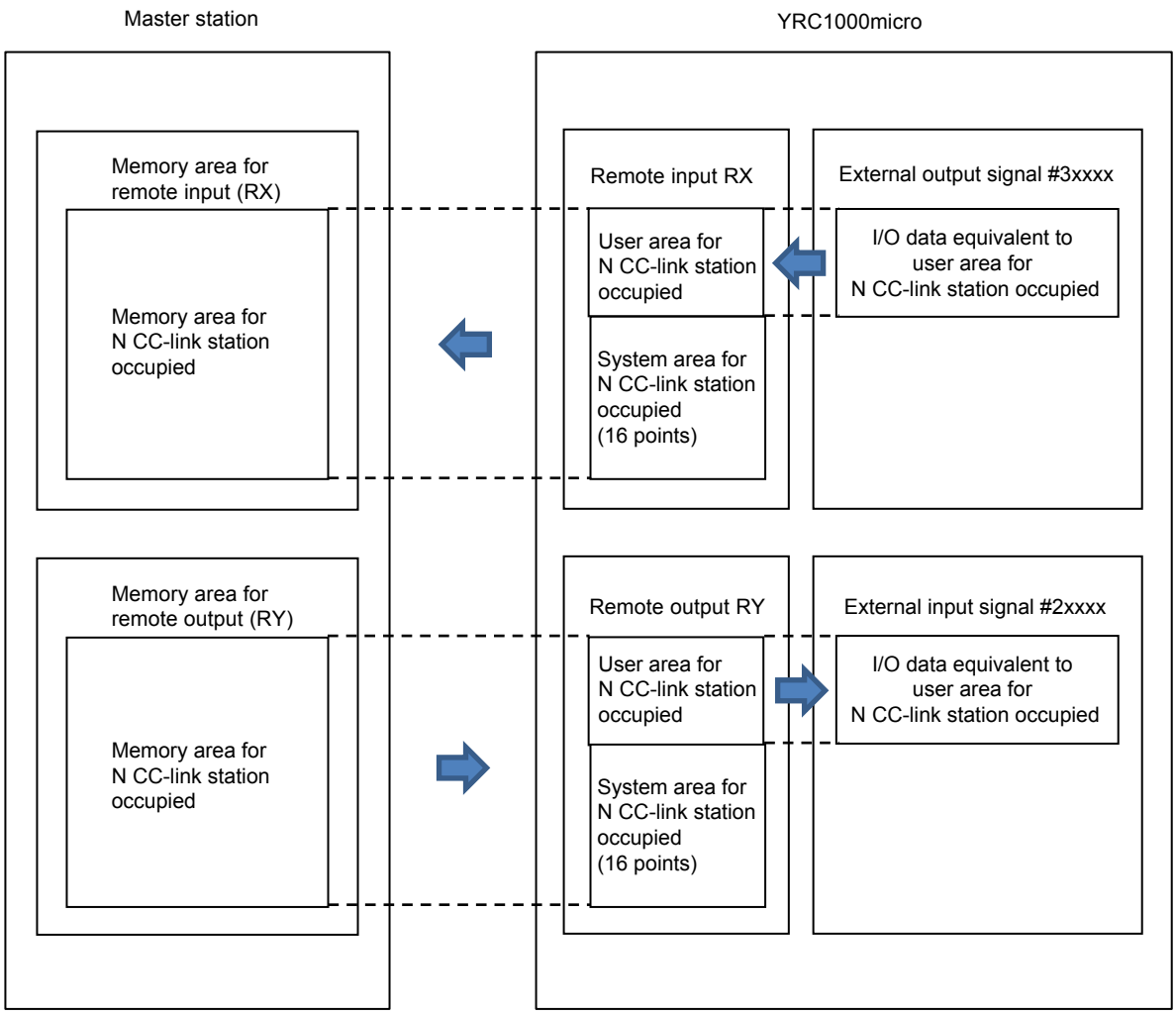
Master station
YRC1000micro
Memory area for remote input (RX)
Memory area for N CC-link station occupied
Remote input RX
User area for N CC-link station occupied
System area for N CC-link station occupied (16 points)
External output signal #3xxxx
I/O data equivalent to user area for N CC-link station occupied
Memory area for remote output (RY)
Memory area for N CC-link station occupied
Remote output RY
User area for N CC-link station occupied
System area for N CC-link station occupied (16 points)
External input signal #2xxxx
I/O data equivalent to user area for N CC-link station occupied

4.4.3 Details and Control of System Area

The CC-Link system area is defined below.
(For details, refer to CC-Link specifications published by CC-Link Partner Association.)

YRC1000micro turns ON the remote Ready bit of the remote input (RX) area when start-up is complete. The system area of other remote inputs (RX) are always OFF. The system area of the remote output (RY) is not subject to monitoring from the YRC1000micro, so the signal of this area does not affect the operation of the YRC1000micro.

Link input (RX)	Signal name	Link output (RY)	Signal name
RX (n) 0	Reserved	RY (n) 0	Reserved
RX (n) 1		RY (n) 1	
RX (n) 2		RY (n) 2	
RX (n) 3		RY (n) 3	
RX (n) 4		RY (n) 4	
RX (n) 5		RY (n) 5	
RX (n) 6		RY (n) 6	
RX (n) 7		RY (n) 7	
RX (n) 8	Initial data processing request flag	RY (n) 8	Initial data processing completion flag
RX (n) 9	Initial data setting completion flag	RY (n) 9	Initial data settings request flag
RX (n) A	Error status flag	RY (n) A	Error reset request flag
RX (n) B	Remote Ready	RY (n) B	Reserved
RX (n) C	Message transmission	RY (n) C	Message transmission request flag
RX (n) D	Message handshake flag	RY (n) D	Message handshake flag
RX (n) E	Reserved	RY (n) E	Reserved
RX (n) F	Reserved	RY (n) F	Reserved

n: Last registered number of the number of occupied points

5 Network Specifications

5.1 CC-Link Terminal Units

CC-Link terminal units are assigned to the following CC-Link stations.

Station: A device that is connected via the CC-Link to which any of station numbers 0 to 64 can be assigned. The following station types are available.

Master station

A station that has the control information (parameters) and controls the entire network. One master station is required in each network.

The station number is fixed to 0.

Slave station

A generic station name for all stations excluding the master station.

Local station

A station that can perform n:n cyclic transmission and transient transmission with the master station and other local stations.

Standby master station

A station that replaces the master station to continue the data link in case the master station function stops. A standby master station has the same functions as the master station, and functions as a local station in a normal condition.

Intelligent device station

A station that can perform 1:n cyclic transmission and transient transmission with the master station.

Remote station

A generic station name for remote I/O stations and remote device stations.

Remote device station

A station that can use bit data and word data.

Remote I/O station

A station that can only use bit data.

NOTE The CCS-PCIE board is assigned to a remote device station.

5.2 Number of Connected Stations of Each Terminal Unit

One master station can connect with 64 stations in total, including remote I/O stations, remote device stations, local stations, standby master stations and intelligent device stations, under the following conditions.

(1) In Remote Net Ver 1 mode

Condition 1	{ (1 × a) + (2 × b) + (3 × c) + (4 × d) } ≦ 64	a: Number of units occupied by 1 station b: Number of units occupied by 2 stations c: Number of units occupied by 3 stations d: Number of units occupied by 4 stations
Condition 2	{ (16 × A) + (54 × B) + (88 × C) ≦ 2034	A: Number of remote I/O stations ≦ 64 B: Number of remote device stations ≦ 42 C: Number of local stations, standby master stations, and intelligent device stations ≦ 26

(2) In Remote Net Ver 2 mode, Remote Net Additional mode

Condition 1	{ (a + a2 + a4 + a8) + (b + b2 + b4 + b8) × 2 + (c + c2 + c4 + c8) × 3 + (d + d2 + d4 + d8) × 4} ≦ 64	a: The total number of Ver 1-compatible slave stations (occupied by 1 station) and Ver 2-compatible slave stations (occupied by 1 station/1-time setting) b: The total number of Ver 1-compatible slave stations (occupied by 2 stations) and Ver 2-compatible slave stations (occupied by 1 station/1-time setting) c: The total number of Ver 1-compatible slave stations (occupied by 3 stations) and Ver 2-compatible slave stations (occupied by 1 station/1-time setting) d: The total number of Ver 1-compatible slave stations (occupied by 4 stations) and Ver 2-compatible slave stations (occupied by 1 station/1-time setting) a2: The number of Ver 2-compatible slave stations (occupied by 1 station/2-time setting) b2: The number of Ver 2-compatible slave stations (occupied by 2 stations/2-time setting) c2: The number of Ver 2-compatible slave stations (occupied by 3 stations/2-time setting) d2: The number of Ver 2-compatible slave stations (occupied by 4 stations/2-time setting) a4: The number of Ver 2-compatible slave stations (occupied by 1 station/4-time setting) b4: The number of Ver 2-compatible slave stations (occupied by 2 stations/4-time setting) c4: The number of Ver 2-compatible slave stations (occupied by 3 stations/4-time setting) d4: The number of Ver 2-compatible slave stations (occupied by 4 station/s4-time setting) a8: The number of Ver 2-compatible slave stations (occupied by 1 station/8-time setting) b8: The number of Ver 2-compatible slave stations (occupied by 2 stations/8-time setting) c8: The number of Ver 2-compatible slave stations (occupied by 3 stations/8-time setting) d8: The number of Ver 2-compatible slave stations (occupied by 4 stations/8-time setting)
Condition 2	[{ (a × 32) + (a2 × 32) + (a4 × 32) + (a8 × 128) } + { (b × 64) + (b2 × 96) + (b4 × 192) + (b8 × 384) } + { (c × 96) + (c2 × 160) + (c4 × 320) + (c8 × 640) } + { (d × 128) + (d2 × 224) + (d4 × 448) + (d8 × 896) }] ≦ 8192	
Condition 3	[{ (a ×4) + (a2 ×8) + (a4 × 16) + (a8 × 32) } + { (b × 8) + (b2 × 16) + (b4 × 32) + (b8 × 64) } + { (c × 12) + (c2 × 24) + (c4 × 48 + (c8 × 96) } + { (d × 16) + (d2 × 32) + (d4 × 64) + (d8 × 128) }] ≦ 2048	
Condition 4	{ (16 × A) + (54 × B) + (88 × C) ≦ 2304	A: Number of remote I/O stations≦ 64 B: Number of remote device stations≦ 42 C: Number of local stations, standby master stations, and intelligent device stations≦26

5.3 Construction and Specifications of Network System

For construction and specifications of network system, refer to "Cable Wiring Manual" published by the CC-Link Partner Association.

6 Error Indication

On the front of the CCS-PCIE board, the four LEDs which indicate the CC-link status are mounted.

LED type		LED status		Remedy
Name	Meaning	Status	Meaning	
RUN	Board operation status display	Green lights up	During normal communication	
		Off	Not connected to the network	• Check the CCS-PCIE communication settings. • Check the connection status for the CC-Link cable and the external terminator. • Check the operation status of the CC-Link master PLC. • Turn the YRC1000micro power OFF and ON. • Replace the CCS-PCIE board.
			Not during communication	
		Red lights up	Board operation error	
ERR	Communication error display	Off	During normal communication	
			Not connected to the network	• Check the CCS-PCIE communication settings. • Check the connection status for the CC-Link cable and the external terminator. • Check the operation status of the CC-Link master PLC. • Turn the YRC1000micro power OFF and ON. • Replace the CCS-PCIE board.
		Red lights up	Receiving error data	
			Board operation error	
		Red blinking	During error mode operation	• Check the CCS-PCIE communication settings. • Turn the YRC1000micro power OFF and ON. • Replace the CCS-PCIE board.

LED type		LED status		Remedy
SD	Sending status display	Green lights up	During normal communication	
		Off	Not during communication	• Check the CCS-PCIE communication settings. • Check the connection status for the CC-Link cable and the external terminator. • Check the operation status of the CC-Link master PLC. • Turn the YRC1000micro power OFF and ON. • Replace the CCS-PCIE board.
		Red lights up	Board operation error	
		Red blinking	Board operation error	• Check the CCS-PCIE communication settings. • Turn the YRC1000micro power OFF and ON. • Replace the CCS-PCIE board.
RD	Receiving status display	Green lights up	During normal communication	
		Off	Not during communication	• Check the CCS-PCIE communication settings. • Check the connection status for the CC-Link cable and the external terminator. • Check the operation status of the CC-Link master PLC. • Turn the YRC1000micro power OFF and ON. • Replace the CCS-PCIE board.
		Red lights up	Board operation error	
		Green blinking	Board operation error	• Check the CCS-PCIE communication settings. • Turn the YRC1000micro power OFF and ON. • Replace the CCS-PCIE board.

YRC1000micro OPTIONS
CC-Link COMMUNICATIONS FUNCTION
INSTRUCTIONS

FOR SST-CCS-PCIE MADE BY Molex, Inc.

©2017 YASKAWA ELECTRIC CORPORATION
Published by YASKAWA

YASKAWA

YASKAWA ELECTRIC CORPORATION

September 2019 17-07

MANUAL NO.
HW1484498 ②